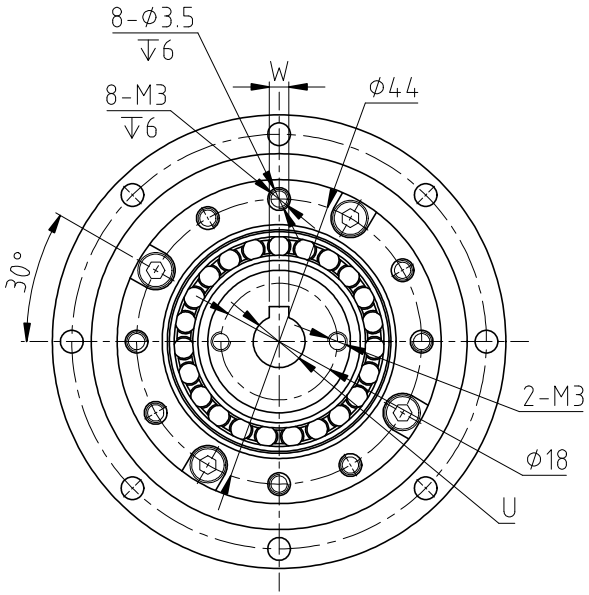

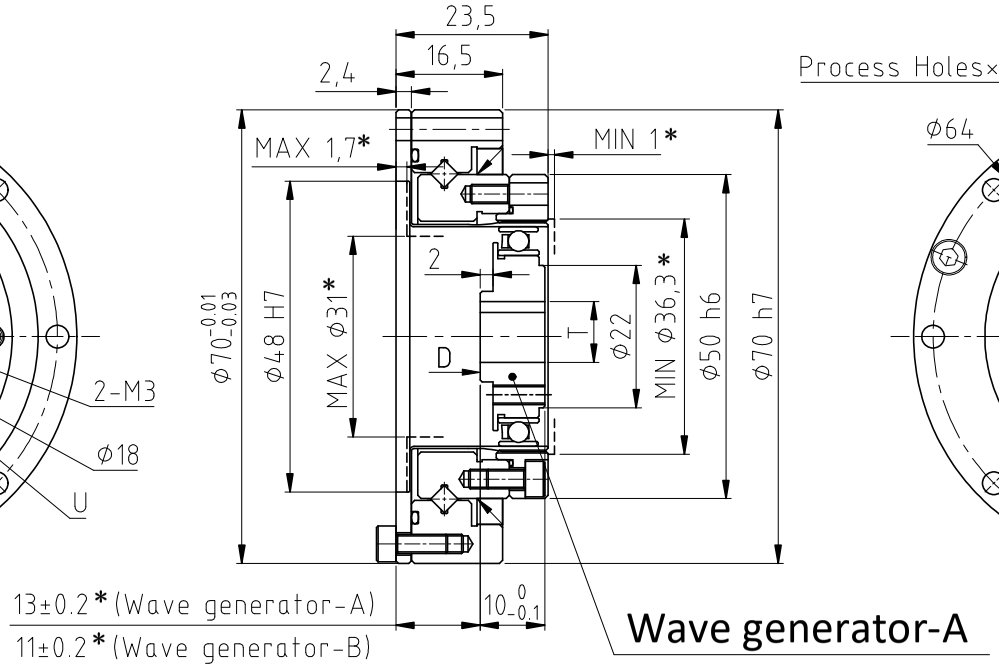

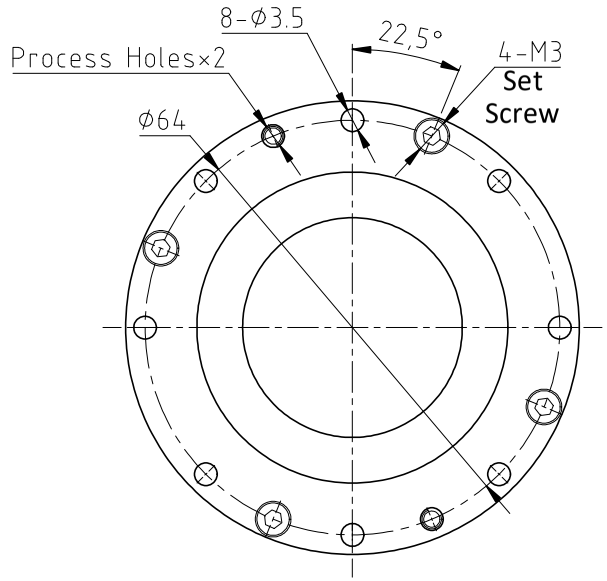

D Direction

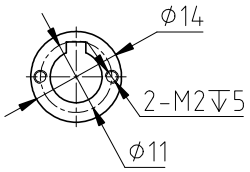

Wave generator-B

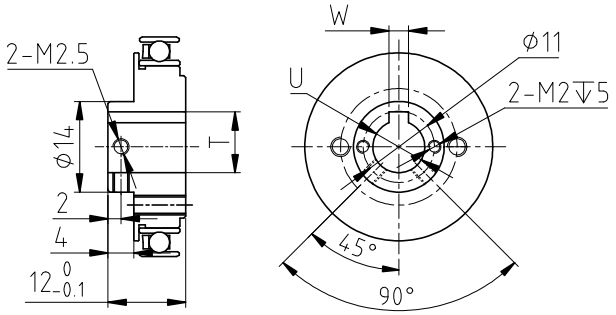

Technical requirements:
1.Please use the grease specified by our company
2.The * in the drawing is the installation reference size, please follow the installation size requirements.
3.If the product performance parameters are not specified, please refer to the latest catalog of our company for the standard values.

Laifual

FHG-14-XX-U-I				Model	Reduction ratio	Rated torque at2000r/min input		Permissible peak torque at start and stop		Permissible maximum value for average load torque		Permissible maximum momentary torque		Permissible maximum input rotational speed	Permissible average input rotational speed	Backlash	Weight	Design life
MODEL	U	T	W			Nm	kgfm	Nm	kgfm	Nm	kgfm	Nm	kgfm	r/min	r/min	Arc Sec	kg	Hour
Wave generator-A/B Φ6	Φ6H7	$7^{+0.1}_{0}$	2JS9/P9	14	50	7	0.7	23	2.3	9	0.9	46	4.7	8500	3500	≤20	FHG-I:0.4	≥10000
Wave generator-A/B Φ8	Φ8H7	$9.4^{+0.1}_{0}$	3JS9/P9		80	10	1	30	3.1	14	1.4	61	6.2	8500	3500	≤20		≥15000
					100	10	1	36	3.7	14	1.4	70	7.2	8500	3500	≤20		≥15000