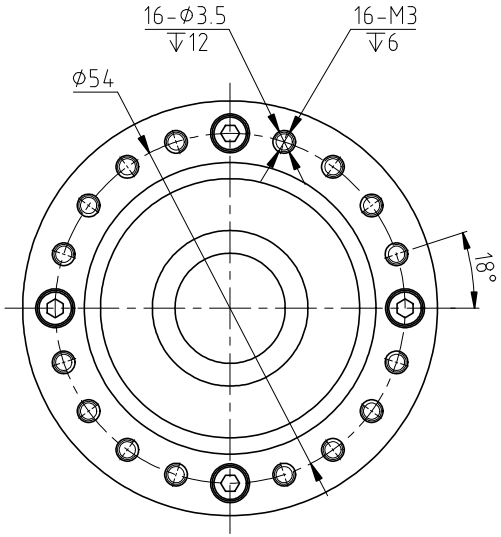

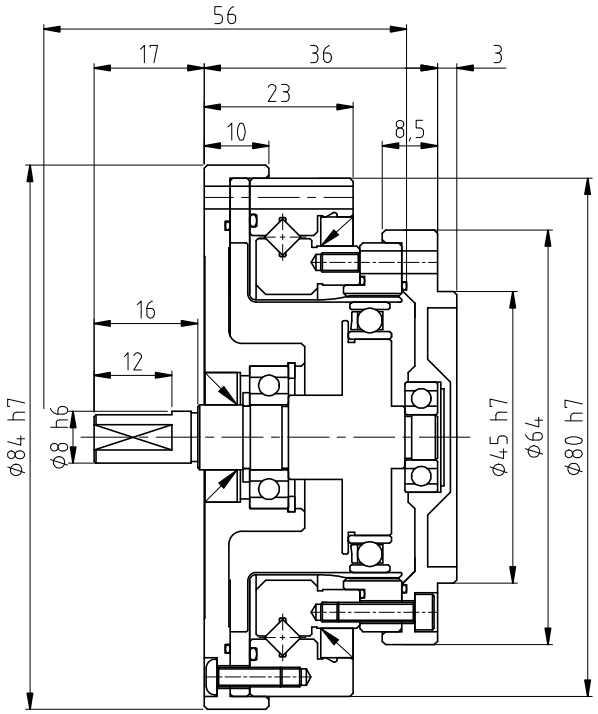

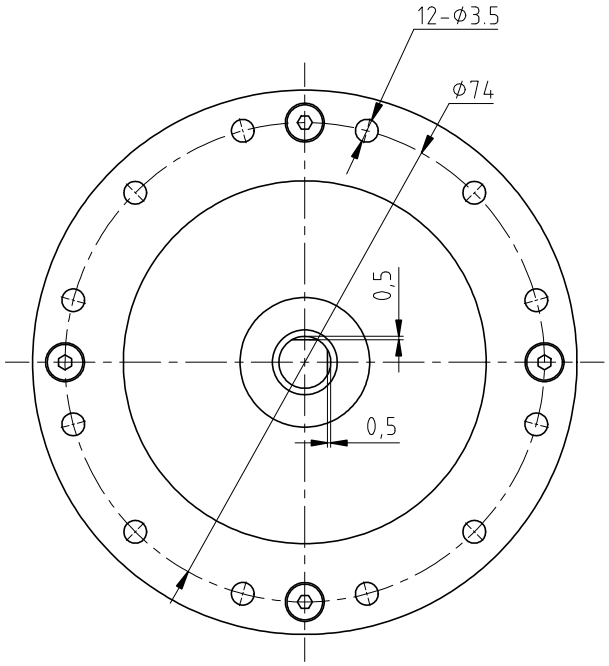

Technical requirements:
1.Please use the grease specified by our company
2.The * in the drawing is the installation reference size, please follow the installation size requirements.
3.If the product performance parameters are not specified, please refer to the latest catalog of our company for the standard values.

Laifual

	Model	Reduction ratio	Rated torque at2000r/min input		Permissible peak torque at start and stop		Permissible maximum value for average load torque		Permissible maximum momentary torque		Permissible maximum input rotational speed	Permissible average input rotational speed	Backlash	weight	Desian life
			Nm	kgfm	Nm	kgfm	Nm	kgfm	Nm	kgfm	r/min	r/min	Arc Sec	kg	Hour
FHG-17-XX-U-IV	17	50	21	2.1	44	4.5	34	3.4	91	9	7300	3500	≤20	FHG-IV:0.9	≥10000
		80	29	2.9	56	5.8	35	3.6	113	12	7300	3500	≤20		≥15000
		100	31	3.2	70	7.2	51	5.2	143	15	7300	3500	≤20		≥15000
		120	31	3.2	70	7.2	51	5.2	112	11	7300	3500	≤20		≥15000