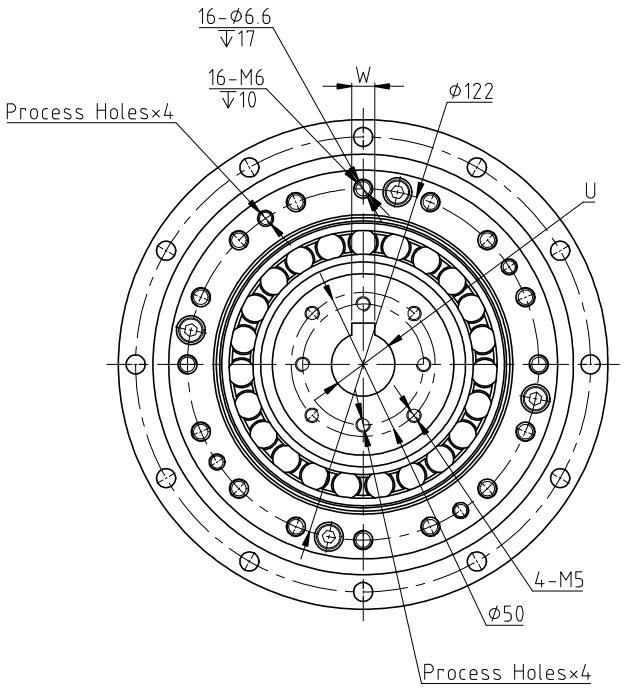

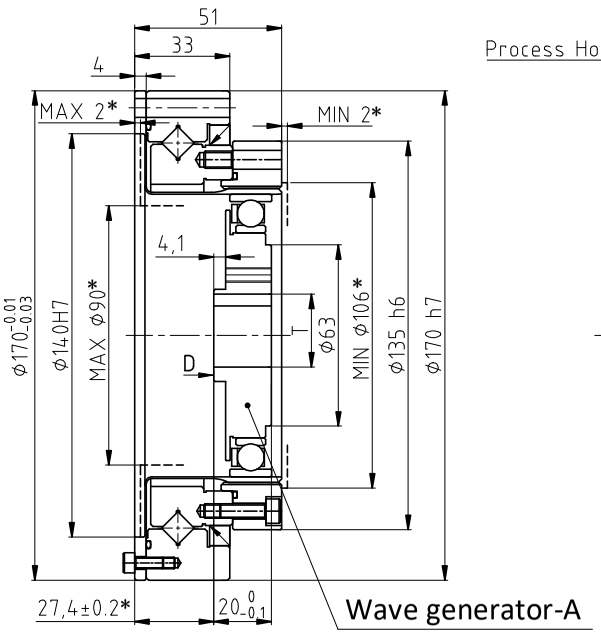

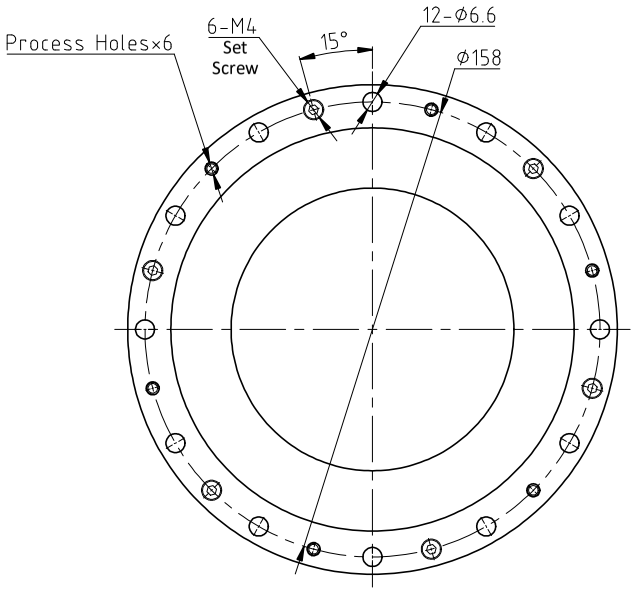

D Direction

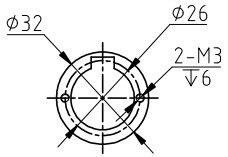

Technical requirements:
1.Please use the grease specified by our company
2.The * in the drawing is the installation reference size, please follow the installation size requirements.
3.If the product performance parameters are not specified, please refer to the latest catalog of our company for the standard values.

Laifual

FHG-40-XX-U-I				Model	Reduction ratio	Rated torque at2000r/min input		Permissible peak torque at start and stop		Permissible maximum value for average load torque		Permissible maximum momentary torque		Permissible maximum input rotational speed	Permissible average input rotational speed	Backlash	weight	Desian life
MODEL	U	T	W															
						Nm	kgfm	Nm	kgfm	Nm	kgfm	Nm	kgfm	r/min	r/min	Arc Sec	kg	Hour
Wave generator-A Φ14	Φ14H7	$16.3^{+0.1}_{0}$	5JS9/P9	40	50	178	18	523	53	255	26	892	91	4000	3500	≤20	FHG-I:4.4	≥10000
Wave generator-A Φ19	Φ19H7	$21.8^{+0.1}_{0}$	6JS9/P9		80	268	27	675	69	369	38	1270	130	4000	3500	≤20		≥15000
Wave generator-A Φ22	Φ22H7	$24.8^{+0.1}_{0}$	6JS9/P9		100	345	35	738	75	484	49	1400	143	4000	3500	≤20		≥15000
		$25.3^{+0.1}_{0}$	8JS9/P9		120	382	39	802	82	586	60	1530	156	4000	3500	≤20		≥15000
					160	382	39	841	86	586	60	1530	156	4000	3500	≤20		≥15000