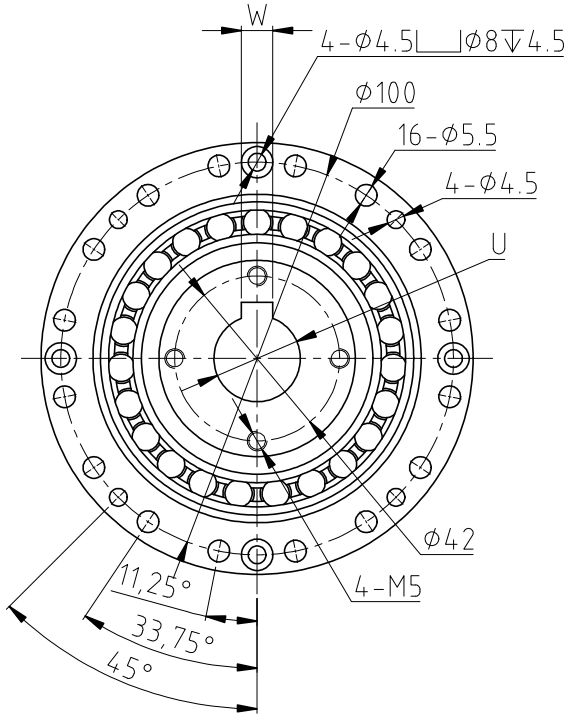

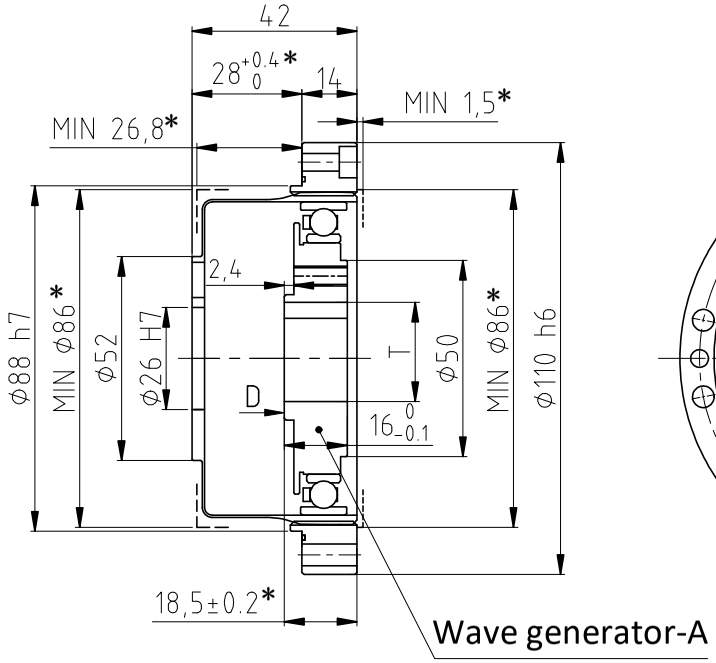

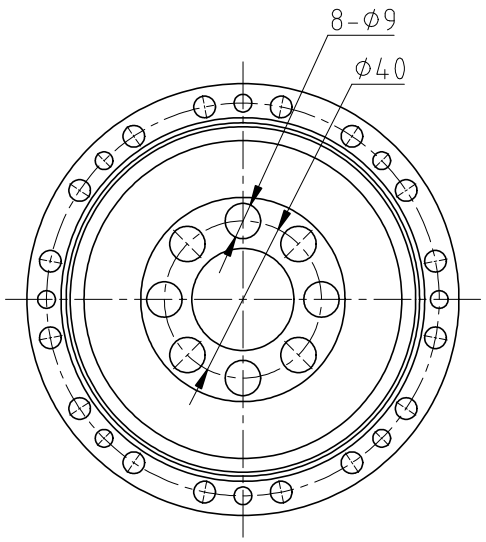

D Direction

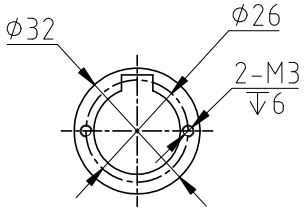

Technical requirements:
1.Please use the grease specified by our company
2.The * in the drawing is the installation reference size, please follow the installation size requirements.
3.If the product performance parameters are not specified, please refer to the latest catalog of our company for the standard values.

Laifual

FSS-32-XX-C-I

MODEL	U	T	W
Wave generator-A Φ14	Φ14H7	$16.3^{+0.1}_{0}$	5JS9/P9
Wave generator-A Φ19	Φ19H7	$21.8^{+0.1}_{0}$	6JS9/P9
Wave generator-A Φ22	Φ22H7	$24.8^{+0.1}_{0}$	6JS9/P9
		$25.3^{+0.1}_{0}$	8JS9/P9

Model	Reduction ratio	Rated torque at2000r/min input		Permissible peak torque at start and stop		Permissible maximum value for average load torque		Permissible maximum momentary torque		Permissible maximum input rotational speed	Permissible average input rotational speed	Backlash	weight	Desian life
		Nm	kgfm	Nm	kgfm	Nm	kgfm	Nm	kgfm	r/min	r/min	Arc Sec	kg	Hour
32	50	76	7.8	216	22	108	11	382	39	4800	3500	≤20	FSS-C:0.89	≥15000
	80	118	12	304	31	167	17	568	58	4800	3500	≤20		≥15000
	100	137	14	333	34	261	22	647	66	4800	3500	≤20		≥15000
	120	137	14	353	36	261	22	686	70	4800	3500	≤20		≥15000
	160	137	14	372	38	261	22	686	70	4800	3500	≤20		≥15000